CIRCUIT DIAGRAMS

1. SMPS CIRCUIT DIAGRAM

IMPORTANT SAFETY NOTICE

WHEN SERVICING THIS CHASSIS, UNDER NO CIRCUMSTANCES SHOULD THE ORIGINAL DESIGN BE MODIFIED OR ALTERED WITH OUT PERMISSION FROM THE LG CORPORATION. ALL COMPONENTS SHOULD BE REPLACED ONLY WITH TYPES IDENTICAL TO THOSE IN THE ORIGINAL CIRCUIT. SPECIAL COMPONENTS ARE SHADED ON THE SCHEMATIC FOR EASY IDENTIFICATION.

THIS CIRCUIT DIAGRAM MAY OCCASIONALLY DIFFER FROM THE ACTUAL CIRCUIT USED. THIS WAY, IMPLEMENTATION OF THE LATEST SAFETY AND PERFORMANCE IMPROVEMENT CHANGES INTO THE SET IS NOT DELAYED UNTIL THE NEW SERVICE LITERATURE IS PRINTED.

NOTE :

1. Shaded(▥) parts are critical for safety. Replace only with specified part number.
2. Voltages are DC-measured with a digital voltmeter during Play mode.

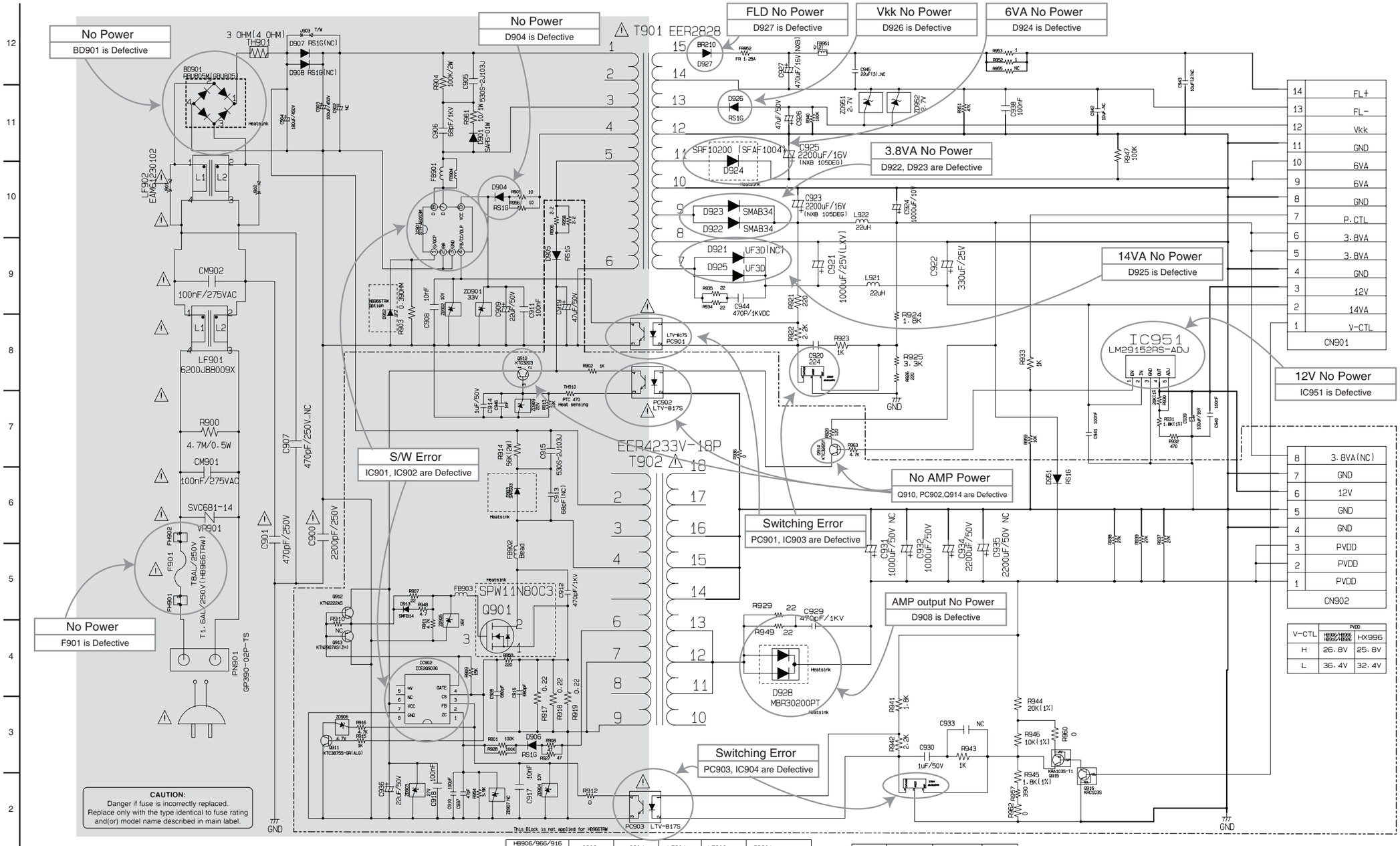

HB906/966/916 HB926/HX996	C903	C904	LF901	LF902	BD901	
120V	X	270uF/250V	6200JB8009X	EAM61230102	RBU805M	Heatsink
110-240V	100uF/450V	180uF/450V	6200JB8009X	EAM61230102	RBU805M	Heatsink
200-240V	X	180uF/450V	EAM60672502	EAM60672501	RBU605M	
Special	68uF/500V	100uF/500V	EAM60672502	EAM60672501	RBU605M	

HB966TRW	C903	F901	LF901	LF902	J901, J902	BD901	TH901
110~240V	68uF/450V	1.6A/250V	616-145H	X	T/W	GBL205	5 ohm
Special	47uF/500V	1.6A/250V	616-145H	X	T/W	GBL205	5 ohm

	R944	R946	R960
HB906/HB966 HB916/HB926	20K(1%)	10K(1%)	0
HX996	18K(1%)	8.2K(1%)	1K(1%)

V-CTL	PVDD	
	HB906/HB966 HB916/HB926	HX996
H	26.8V	25.8V
L	36.4V	32.4V

NOTE) ⚠Warning
Parts that are shaded are critical with respect to risk of fire or electrical shock.

NOTES) ⏚ Symbol denotes AC ground.
⏚ Symbol denotes DC chassis ground.

SMPS
EBY61089401, REV7.3
2011.02.24

Copyright © 2011 LG Electronics Inc. All right reserved.
Only for training and service purposes.